# GLAZING SCHEDULE

GLAZING SHALL MEET THE FOLLOWING STANDARDS AND GUIDELINES AS APPLICABLE FOR EACH TYPE:
- ASTM E 1300, ASTM C 1036, ASTM C 1048, ASTM E 774
- GANA GLAZING MANUAL
- SIGMA TM-3000 VERTICAL GLAZING GUIDELINES

**IG-1: LOW-E TINTED INSULATED GLAZING**

- PRODUCT: UNIT OVERALL THICKNESS
  WINTER U-VALUE: .33, SUMMER U-VALUE: .33
  SHADING COEFFICIENT: .54
  COLOR TO BE SELECTED BY ARCHITECT
- INDOOR LITE: TYPE I, CLASS I, QUALITY Q3 FLOAT GLASS, KIND HS (HEAT STRENGTHENED), CONDITION A
- OUTDOOR LITE: TYPE I, CLASS I, QUALITY Q3 FLOAT GLASS, KIND HS (HEAT STRENGTHENED), CONDITION A
- LOW-EMISSIVITY COATING ON THIRD SURFACE

**IG-2: LOW-E TINTED INSULATED TEMPERED GLAZING**

- PRODUCT: UNIT OVERALL THICKNESS
  WINTER U-VALUE: .33, SUMMER U-VALUE: .33
  SHADING COEFFICIENT: .54
  COLOR TO BE SELECTED BY ARCHITECT
- INDOOR LITE: TYPE I, CLASS I, QUALITY Q3 FLOAT GLASS, KIND FT (FULLY TEMPERED), CONDITION A
- OUTDOOR LITE: TYPE I, CLASS I, QUALITY Q3 FLOAT GLASS, KIND FT (FULLY TEMPERED), CONDITION A
- LOW-EMISSIVITY COATING ON THIRD SURFACE

**IG-3: TINTED INSULATED SPANDREL GLAZING**

- PRODUCT: UNIT OVERALL THICKNESS
  WINTER U-VALUE: .33, SUMMER U-VALUE: .33
  COLOR TO BE SELECTED BY ARCHITECT
- INDOOR LITE: TYPE I, CLASS I, QUALITY Q3 FLOAT GLASS, KIND FT (FULLY TEMPERED), CONDITION B
- OUTDOOR LITE: TYPE I, CLASS I, QUALITY Q3 FLOAT GLASS, KIND FT (FULLY TEMPERED), CONDITION A
- CERAMIC FRIT ON FOURTH SURFACE
  COLOR TO BE SELECTED BY ARCHITECT

**IG-4: LOW-E TINTED INSULATED TEMPERED GLAZING (USDA)**

- PRODUCT: UNIT OVERALL THICKNESS
  WINTER U-VALUE: .33, SUMMER U-VALUE: .33
  SHADING COEFFICIENT: .54
  COLOR TO BE SELECTED BY ARCHITECT
- INDOOR LITE: TYPE I, CLASS I, QUALITY Q3 FLOAT GLASS, KIND FT (FULLY TEMPERED), CONDITION A
- OUTDOOR LITE: TYPE I, CLASS I, QUALITY Q3 FLOAT GLASS, KIND FT (FULLY TEMPERED), CONDITION A
- LOW-EMISSIVITY COATING ON THIRD SURFACE
- PROVIDE CLEAR SECURITY WINDOW FILM ON FOURTH SURFACE MEETING CPSC 1201, CATEGORY II & ANSI Z97.1 SPECIFICATIONS FOR GLASS BREAKAGE IN FOOD MANUFACTURING FACILITIES (UNLIMITED). PRODUCT TO BE "SHATTER SAFE" SSF-700 OR EQUAL.

**GL-1: CLEAR FLOAT GLASS**

- LITE: TYPE I, CLASS I, QUALITY Q3 FLOAT GLASS, KIND HS (HEAT STRENGTHENED), CONDITION A, 1/4" THICK

**GL-2: CLEAR FLOAT GLASS, TEMPERED**

- LITE: TYPE I, CLASS I, QUALITY Q3 FLOAT GLASS, KIND FT (FULLY TEMPERED), CONDITION A, 1/4" THICK

**GL-3: CLEAR FLOAT GLASS, WIRED**

- LITE: TYPE II, CLASS I, QUALITY Q8 FORM 1, MESH m1

**GL-4: TINTED FLOAT GLASS**

- LITE: TYPE I, CLASS II, QUALITY Q3 FLOAT GLASS, KIND HS (HEAT STRENGTHENED), CONDITION A, 1/4" THICK
  COLOR: GRAY

**GL-5: TINTED FLOAT GLASS, TEMPERED**

- LITE: TYPE I, CLASS II, QUALITY Q3 FLOAT GLASS, KIND FT (FULLY TEMPERED), CONDITION A, 1/4" THICK
  COLOR: GRAY

**GL-6: UV AND ABRASION RESISTANT POLYCARBONATE GLAZING**

- PRODUCT:
  **GE PLASTICS** LEXAN® MR10 WITH MARGARD II COATING
  1/4" THICK FOR LITES 600 SQ. IN. OR LESS
  3/8" THICK FOR LITES BETWEEN 600 & 1200 SQ. IN.
  1/2" THICK FOR LITES LARGER THAN 1200 SQ. IN.

**GL-7: FIRE & IMPACT RATED GLAZING**

- PRODUCT:
  **TECHNICAL GLASS PRODUCTS** 5/16" FIRELITE PLUS® GLAZING STANDARD FINISH

# HOLLOW METAL DOOR & FRAME SPECIFICATIONS:

**MANUFACTURER:**
- CURRIES (APPROVED EQUIVALENT: STEELCRAFT)

**CONSTRUCTION:**
- FRAMES
  - 'M' PROFILE w/ CONT. WELD FACE SEAMS AT FULL WIDTH OF JAMB
  - MIN. 16 ga. @ INTERIOR FRAMES
  - MIN. 14 ga. @ EXTERIOR FRAMES w/ FIBERGLASS INSUL. OR URETHANE FOAM INSUL.
- GENERAL REQUIREMENTS
  - ALL EXTERIOR DOORS AND FRAMES TO BE GALVANIZED
  - ALL DOORS & FRAMES TO HAVE BAKED ON PRIMER FINISH
  - ALL DOORS & FRAMES TO BE REINFORCED AND PREPARED FOR HARDWARE
  - ALL REINFORCEMENT TO BE MIN. 12 ga.
  - PROVIDE WELDED-IN BASE ANCHORS
  - PROVIDE (3) SILENCERS PER JAMB @ ALL METAL DOOR FRAMES
  - PROVIDE BITUMINOUS COATING ON INT. FACE OF FRAMES IN MASONRY WALLS
  - PROVIDE METAL FRAME FOR LITES & GRILLES
  - PAINT LITE FRAMES TO MATCH DOOR FRAMES

# SOLID CORE WOOD DOOR SPECIFICATIONS:

**MANUFACTURER:**
- MARSHFIELD DOOR SYSTEMS, INC.

**CONSTRUCTION:**
- 5 PLY CONSTRUCTION w/ STILES AND RAILS BONDED TO CORE
- PARTICLE BOARD CORE OR STRUCTURAL COMPOSITE LUMBER CORE PER MANUFACTURER RECOMMENDATIONS w/ HARDWOOD EDGES TO MATCH FACE SPECIES AS REQ'D FOR CUTOUTS
- MINERAL CORE w/ HARDWOOD EDGES TO MATCH FACE SPECIES AS REQ'D FOR FIRE RATED DOORS
- RED OAK, PLAIN SLICED WDMA CUSTOM GRADE w/ GRADE A FACES STANDARD DUTY DOOR UNLESS NOTED OTHERWISE
- VENEER LEAVES TO BE BOOK MATCH, RUNNING MATCH PAIR AND SET MATCH @ DOORS IN SAME OPENING OR FRAME
- FACTORY FINISHED w/ STAIN AND TR-6 PREMIUM FINISH, CUSTOM STAIN COLOR AS SELECTED BY ARCHITECT/OWNER
- PROVIDE BLOCKING AS REQ'D TO ELIMINATE THROUGH BOLTING OF ALL HARDWARE
- PROVIDE MANUF. STANDARD FLUSH WOOD BEAD AT LITES & GRILLES (WDMA OPTION: M1)
- ALL RATED DOORS ARE TO BE CATEGORY A, POSITIVE PRESSURE, UL10C

**WARRANTY:**
- LIFETIME

# EXTERIOR ALUM. STOREFRONT SPECIFICATIONS:

**MANUFACTURER:**
- KAWNEER

**PRODUCT:**
- TRIFAB VG 451T THERMALLY BROKEN FRAMING SYSTEM

**CONSTRUCTION:**
- 2" x 4 1/2" DEEP FRAMING MEMBERS. ASTM B 221; 6063-T5 ALLOY AND TEMPER
- [FRONT, CENTER, BACK, or MULTI-PANE] GLAZING SYSTEM
- SUPPLIER TO VERIFY ALL WIND LOAD AND DEFLECTION CRITERIA AND PROVIDE ALL ACCESSORIES AND REINFORCEMENT AS REQ'D BY APPLICABLE CODES AND FOR A COMPLETE INSTALLATION
- SUPPLIER TO PROVIDE AND INSTALL ANY REQ'D BRAKE METAL PANELS AS REQ'D TO COVER ANY STRUCTURE, FRAMING, OR ADJACENT / INTERVENING CONSTRUCTION
- PROVIDE CONT. EXTRUDED SILL FLASHING AT EACH EXT. FRAMING UNIT
- PROVIDE CONT. EXTRUDED, THERMALLY BROKEN HEAD RECEPTOR AT EACH FRAMING UNIT
- PROVIDE CONT. EXTRUDED, THERMAL FLAT FILLER TO JAMB MEMBERS
- WHERE ALUMINUM WILL CONTACT DISSIMILAR METALS, PROTECT AGAINST GALVANIC REACTIONS BY PAINTING CONTACT SURFACES WITH PRIMER OR BY APPLYING SEALANT OR TAPE PER MANUF. SPEC'S

PAINT (70% KYNAR)
FINISH TO BE KAWNEER PERMADIZE (70% PVDF), AAMA 2605, FLUOROPOLYMER COATING - COLOR TO MATCH EXISTING

# INTERIOR ALUM. STOREFRONT SPECIFICATIONS:

**MANUFACTURER:**
- KAWNEER

**PRODUCT:**
- TRIFAB VG 451 FRAMING SYSTEM

**CONSTRUCTION:**
- 2" x 4 1/2" DEEP FRAMING MEMBERS. ASTM B 221; 6063-T5 ALLOY AND TEMPER
- [FRONT, CENTER, BACK, or MULTI-PANE] GLAZING SYSTEM
- SUPPLIER TO VERIFY ALL WIND LOAD AND DEFLECTION CRITERIA AND PROVIDE ALL ACCESSORIES AND REINFORCEMENT AS REQ'D BY APPLICABLE CODES AND FOR A COMPLETE INSTALLATION
- SUPPLIER TO PROVIDE AND INSTALL ANY REQ'D BRAKE METAL PANELS AS REQ'D TO COVER ANY STRUCTURE, FRAMING, OR ADJACENT / INTERVENING CONSTRUCTION
- PROVIDE CONT. EXTRUDED, HEAD RECEPTOR AT EACH FRAMING UNIT
- WHERE ALUMINUM WILL CONTACT DISSIMILAR METALS, PROTECT AGAINST GALVANIC REACTIONS BY PAINTING CONTACT SURFACES WITH PRIMER OR BY APPLYING SEALANT OR TAPE PER MANUF. SPEC'S

PAINT (70% KYNAR)
FINISH TO BE KAWNEER PERMADIZE (70% PVDF), AAMA 2605, FLUOROPOLYMER COATING - COLOR TO MATCH EXISTING

# DOOR HARDWARE KEY

HINGES

| | DESCRIPTION / FINISH | Ives | Hager | McKinney | Stanley |
|---|---|---|---|---|---|
| H1 | STANDARD (626) | 5BB1 | BB1279 | TA2714 | FBB179 |
| H2 | HEAVY (626) | 5BB1HW | BB1168 | T4A3786 | FBB168 |
| H3 | STANDARD (630) | 5BB1 SS | BB1191 | TA2314 | FBB191 |
| H4 | HEAVY (630) | 5BB1HW SS | BB1199 | T4A3386 | FBB199 |

CONTINUOUS HINGES

| | DESCRIPTION / FINISH | Roton (Hager) | McKinney | Select | Pemko |
|---|---|---|---|---|---|
| H5 | AL. GEAR TYPE (MATCH) | 780-212HD | MCK-12HD | SL-11HD | CFMHD |
| H6 | AL. GEAR TYPE (630) | 780-224HD | MCK-25HD | SL-24HD | CFMHD |
| H7 | SS PIN/BARREL (630) | 790-900 | MCK-FM300 | SL-300 | SPDFM |

LOCKSETS

| | DESCRIPTION / FINISH | Schlage ND Series (RHO) | Sargent 10-Line (LL) | Best 93K (15D) |
|---|---|---|---|---|
| L1 | ENTRANCE (626) | ND53PD | 10G05 | 93K AB |
| L2 | CLASSROOM (626) | ND70PD | 10G37 | 93K R |
| L3 | PRIVACY (626) | ND40S | 10U65 | 93K L |
| L4 | STOREROOM (626) | ND80PD | 10G04 | 93K D |
| L5 | RIM CYLINDER (626) | 20-022 | 34 SERIES | 1E-72 |
| L6 | INSTITUTION (626) | ND82PD | 10G17 | 93K W |
| L7 | MORTISE CYLINDER (626) | 20-001 | 40 SERIES | 1E-74 |
| L8 | DEADLOCK (626) | B660P | 480 SERIES | 83T SERIES |
| L9 | PASSAGE (626) | ND10S | 10U15 | 93K N |
| L10 | EXIT ONLY (626) | ND25 | 10G13 | 93K Y |
| L11 | DUMMY TRIM (626) | ND170 | 10U93 | 93K 1DT |
| L12 | PUSH BUTTON (626) | CO100-CY-70 | | |

STOPS

| | DESCRIPTION / FINISH | Ives | Hager | Rockwood |
|---|---|---|---|---|
| S1 | FLOOR MTD. (626) | FS436 | 241F | 441 |
| S2 | WALL MTD. (626) | WS407CCV | 236W | 409 |

OVERHEAD STOPS

| | DESCRIPTION / FINISH | Glynn-Johnson | Sargent | Rixson |
|---|---|---|---|---|
| S3 | HD SURFACE MTD. (630) | 90 Series | 590 | 9 Series |
| S4 | HD CONCEALED (630) | 100 Series | 690 | 1 Series |
| S5 | STD. CONCEALED (630) | 410 Series | 1530 | 2 Series |
| S6 | STD. SURFACE MTD. (630) | 450 Series | 1540 | 10 Series |

CLOSERS

| | DESCRIPTION / FINISH | LCN | Sargent | Norton |
|---|---|---|---|---|
| C1 | PULL SIDE REG. (689) | 4040 XP REG | 351 O | 7501 |
| C2 | PULL SIDE HOLD-OPEN (689) | 4040XP H | 351 H | 7501H |
| C3 | PUSH SIDE REG. (689) | 4040XP EDA | 351 P10 | PR7501 |
| C4 | PUSH SIDE w/ STOP (689) | 4040XP CUSH | 351 PS | CLP7501 |
| C5 | PUSH SIDE HOLD-OPEN (689) | 4040XP HCUSH | 351 PSH | CLP7501H |
| C6 | PUSH SIDE EXT. DOORS (689) | 4040XP SCUSH | 351 CPS | UNI7501 |
| C7 | DROP PLATE (689) | 4040XP-18PA | 351-D | 7788 |

EXIT DEVICES

| | | VonDuprin | | Sargent | |
|---|---|---|---|---|---|
| | DESCRIPTION / FINISH | Med./Wide Stile | Narrow Stile | Med./Wide Stile | Narrow Stile |
| E1 | RIM - EXIT ONLY (626) | 98/99EO | 33EO | 8810 | 8400 Series |
| E2 | RIM - LEVER (626) | 98/99Lx996L | 33Lx360L | 8813 ETL | |
| E3 | SURF. RODS - LEVER (626) | 98/9927Lx996L | 3327Lx360L | 8713 ETL | |
| E4 | CON. RODS - LEVER (626) | 98/9947Lx996L | 3347Lx360L | 8613 ETL | |
| E5 | RIM - EXIT ONLY (630) | 98EO | | 8810 | |
| E6 | RIM - LEVER (630) | 98Lx996L | | 8813 ETL | |
| E7 | SURF. RODS - LEVER (630) | 9827Lx996L | | 8713 ETL | |

When a cylinder lockset is scheduled with an exit device, trim w/ cylinder should be provided. If no cylinder lockset is scheduled, trim shall be blank escutcheon (unless specified otherwise)

PUSH-PULL / KICKPLATES

| | DESCRIPTION / FINISH | Rockwood | Hager | Ives |
|---|---|---|---|---|
| PP1 | PUSH PLATE (630) | 70C | 30S | 8200 4"x16" |
| PP2 | PULL w/ PLATE (630) | 106x70C | 33E | 8302 |
| PP3 | PUSH-PULL BAR (630) | BF15847 | 160D | 9190-12 |
| K1 | KICKPLATE 8"x2"LDW (630) | K1050-B4E | 190S | 8400 |

WEATHERSTRIP, SWEEPS, & THRESHOLDS

| | DESCRIPTION | National Guard | Reese | Pemko |
|---|---|---|---|---|
| T1 | THRESHOLD | 8424 | S282A | 252x2 FG |
| T2 | SS SADDLE THRESHOLD | - | 2125 | 154SS |
| T3 | SS THERMAL THRESHOLD | - | - | 252-3SSFG |
| SW1 | SWEEP | 200NA | 772 | 315N |
| WS1 | WEATHERSTRIP | 160VA | DS106C | 294AV |
| WS2 | SMOKE SEAL | 5050B | 797B | S88 |

MISC. HARDWARE

| | DESCRIPTION | Ives | Rockwood | KAWNEER |
|---|---|---|---|---|
| CO1 | COORDINATOR (626 Chrome) | COR Series | 2600 Series | |
| CO2 | COORDINATOR (Painted Black) | COR Series | 2600 Series | |
| FB1 | AUTO - METAL (626) | FB31P | 2842 | |
| FB2 | AUTO - WOOD (626) | FB41P | 2948 | |
| FB3 | MANUAL - METAL (626) | FB458 | 555 | |
| FB4 | MANUAL - WOOD (626) | FB358 | 557 | |
| FB5 | AUTO - SS (630) | - | 2848 | |
| B1 | SURFACE BOLT - SS (630) | - | 580 - 12" (24" at doors > 7') | |
| RL1 | ROLLERLATCH (630) | RL32 | 592 | |
| LP1 | LATCH PADDLE DEVICE (630) | | | AR4590 |
| | | **VonDuprin** | **HES** | **Securitron** |
| ES1 | AT RIM EXIT DEVICE (630) | 6300 | 9500/9600 Series | N/A |
| ES2 | AT STD. LOCKSET (630) | 6211 | 1006 Series | UNL |
| | | **VonDuprin** | **Sargent** | |
| RM1 | REMOVABLE MULLION (626) | KR4954 | L980 | |
| | | **Pemko** | **Zero International** | |
| AS1 | 'T' ASTRAGAL | 355CS | - | |
| AS2 | SECURITY ASTRAGAL | - | #43SP | |
| AS3 | SECURITY ASTRAGAL (630) | - | #43STST | |

MOTORIZED DOOR OPTIONS

| | OPERATION DESCRIPTION | | |
|---|---|---|---|
| RC | RADIO CONTROLLED | | |
| 3B | 3 PUSH BUTTON | | |
| CW | COUNTERWEIGHT OPERATING SYSTEM | | |
| M | MANUAL | | |
| | **LIFT DESCRIPTION** | | |
| MFV | MAX FULL VERTICAL | | |
| HLV | HIGH LIFT PARTIAL VERITCAL | | |
| STD | STANDARD | | |
| LHR | LOW HEAD-ROOM | | |

DOOR SCHEDULE

| DOOR NO. | DOOR SIZE: WIDTH | HEIGHT | THICKNESS | DOOR TYPE | FRAME TYPE | FIRE RATING | DOOR HARDWARE: HINGE | LOCKSET | STOPS | CLOSER | EXIT DEVICE | PUSH-PULL / KICK | MISC. | W.S., SWEEP, THRESHOLD | DOOR OPTIONS: OPERATION | LIFT | REMARKS |
|---|---|---|---|---|---|---|---|---|---|---|---|---|---|---|---|---|---|
| 001 | 3'-0" | 7'-0" | 1 3/4" | MD1 | HM1 | 1 HOUR | H1 | L9 | | C3 | | | | | | | |
| 003a | 3'-0" | 7'-0" | 1 3/4" | MD1 | HM1 | 1 HOUR | H1 | L2 | S2 | C3 | | | | | | | |
| 004 | 3'-0" | 7'-0" | 1 3/4" | WD2 | HM1 | | H1 | L2 | S2 | | | | | | | | |
| 005 | 3'-0" | 7'-0" | 1 3/4" | WD2 | HM1 | | H1 | L2 | S2 | | | | | | | | |
| 006 | 3'-0" | 7'-0" | 1 3/4" | WD2 | HM1 | | H1 | L2 | S2 | | | | | | | | |
| 007 | 3'-0" | 7'-0" | 1 3/4" | WD1 | HM1 | | H1 | L3 | S2 | | | | | | | | |
| 100A | 3'-1" | 7'-0" | 1 3/4" | AD5 | AD2 | | H5 | L1 | | C6 | E4 | | | T1/SW1/WS1 | | | 1 |
| 100B | 3'-1" | 7'-0" | 1 3/4" | AD5 | AD2 | | H5 | L1 | | C6 | E4 | | | T1/SW1/WS1 | | | 1 |
| 100C | 3'-0" | 7'-0" | 1 3/4" | AD5 | AD3 | | H5 | L1 | | C5 | E4 | | | T1/SW1/WS1 | | | 1 |
| 100D | 3'-0" | 7'-0" | 1 3/4" | AD5 | AD3 | | H5 | L1 | | C5 | E4 | | | T1/SW1/WS1 | | | 1 |
| 102 | 3'-0" | 7'-0" | 1 3/4" | WD1 | HM1 | | H1 | L2 | S2 | | | | | | | | |
| 102a | 3'-0" | 7'-0" | 1 3/4" | WD2 | HM1 | | H1 | L2 | S2 | | | | | | | | |
| 103A | 3'-0" | 7'-0" | 1 3/4" | WD2 | HM1 | 1 HOUR | H1 | L2 | | C3 | | | | | | | |
| 103B | 3'-0" | 7'-0" | 1 3/4" | AD5 | AD1 | | H5 | L5 | | C6 | | | ES | T1/SW1/WS1 | | | |
| 104 | 3'-0" | 7'-0" | 1 3/4" | WD2 | HM1 | | H1 | L2 | S2 | | | | | | | | |
| 105 | 3'-0" | 7'-0" | 1 3/4" | WD2 | HM1 | | H1 | L2 | S2 | | | | | | | | |
| 106 | 3'-0" | 7'-0" | 1 3/4" | WD1 | HM1 | | H1 | L3 | S2 | | | | | | | | |
| 107 | 3'-0" | 7'-0" | 1 3/4" | WD2 | HM1 | | H1 | L2 | S2 | | | | | | | | |
| 108 | 3'-0" | 7'-0" | 1 3/4" | WD2 | HM1 | | H1 | L2 | S2 | | | | | | | | |
| 118A | 3'-0" | 7'-0" | 1 3/4" | WD2 | HM1 | | H1 | L2 | S2 | | | | | | | | |
| 118B | 3'-0" | 7'-0" | 1 3/4" | WD2 | HM1 | | H1 | L2 | S2 | | | | | | | | |
| 119 | 3'-0" | 7'-0" | 1 3/4" | WD2 | HM1 | | H1 | L2 | S2 | | | | | | | | |
| 120 | 3'-0" | 7'-0" | 1 3/4" | WD2 | HM1 | | H1 | L2 | S2 | | | | | | | | |
| 121 | 3'-0" | 7'-0" | 1 3/4" | WD2 | HM1 | | H1 | L2 | S2 | | | | ES | | | | |
| 200b | 3'-0" | 7'-0" | 1 3/4" | WD2 | HM1 | | H1 | L2 | S2 | C3 | | | ES | | | | |
| 201 | 3'-0" | 7'-0" | 1 3/4" | WD2 | HM1 | 1 HOUR | H1 | L9 | S2 | C3 | | | | | | | |
| 201a | 2'-8" | 7'-0" | 1 3/4" | WD1 | HM1 | | H1 | L2 | S2 | | | | | | | | |
| 202 | 3'-0" | 7'-0" | 1 3/4" | WD2 | HM1 | | H1 | L2 | S2 | | | | | | | | |
| 203A | 6'-0" | 7'-0" | 1 3/4" | (2)WD1 | HM1 | | H1 | L2 | | | | | FB4 | | | | |
| 203B | 6'-0" | 7'-0" | 1 3/4" | (2)WD1 | HM1 | | H1 | L2 | | | | | FB4 | | | | |
| 203c | 3'-0" | 7'-0" | 1 3/4" | WD2 | HM1 | | H1 | L2 | S2 | C3 | | | ES | | | | |
| 204 | 3'-0" | 7'-0" | 1 3/4" | WD2 | HM1 | | H1 | L2 | S2 | C3 | | | ES | | | | |
| 206 | 3'-0" | 7'-0" | 1 3/4" | WD1 | HM1 | | H1 | L2 | S2 | | | | | | | | |
| 207 | 3'-0" | 7'-0" | 1 3/4" | WD2 | HM1 | 30 MIN. | H1 | L2 | S2 | C3 | | | | | | | |
| 208 | 3'-0" | 7'-0" | 1 3/4" | WD1 | HM1 | 30 MIN. | H1 | L12 | S2 | C3 | | | | | | | |
| 211 | 3'-0" | 7'-0" | 1 3/4" | WD1 | HM1 | | H1 | L3 | S2 | | | | | | | | |
| 212 | 3'-0" | 7'-0" | 1 3/4" | WD1 | HM1 | | H1 | L3 | S2 | | | | | | | | |
| 214 | 3'-0" | 7'-0" | 1 3/4" | WD1 | HM1 | | H1 | L12 | S2 | | | | | | | | |
| 215 | 3'-0" | 7'-0" | 1 3/4" | MD1 | HM1 | | H1 | L12 | S2 | | | | | | | | |
| 216 | 3'-0" | 7'-0" | 1 3/4" | WD1 | HM1 | | H1 | L12 | S2 | | | | | | | | |
| 217 | 3'-0" | 7'-0" | 1 3/4" | WD1 | HM1 | | H1 | L3 | S2 | | | | | | | | |
| 218 | 3'-0" | 7'-0" | 1 3/4" | WD1 | HM1 | | H1 | L3 | S2 | | | | | | | | |
| 219 | 3'-0" | 7'-0" | 1 3/4" | WD1 | HM1 | 30 MIN. | H1 | L12 | S2 | C3 | | | | | | | |
| 221 | 3'-0" | 7'-0" | 1 3/4" | WD1 | HM1 | | H1 | L3 | S2 | | | | | | | | |
| 222 | 3'-0" | 7'-0" | 1 3/4" | WD1 | HM1 | | H1 | L3 | S2 | | | | | | | | |
| 223 | 3'-0" | 7'-0" | 1 3/4" | WD1 | HM1 | | H1 | L12 | S2 | | | | | | | | |
| 224 | 3'-0" | 7'-0" | 1 3/4" | WD1 | HM1 | | H1 | L12 | S2 | | | | | | | | |
| 227 | 3'-0" | 7'-0" | 1 3/4" | WD1 | HM1 | | H1 | L12 | S2 | | | | | | | | |
| 228 | 3'-0" | 7'-0" | 1 3/4" | WD1 | HM1 | | H1 | L3 | S2 | | | | | | | | |
| 230 | 3'-0" | 7'-0" | 1 3/4" | WD1 | HM1 | | H1 | L3 | S2 | | | | | | | | |
| 231 | 3'-0" | 7'-0" | 1 3/4" | WD1 | HM1 | 30 MIN. | H1 | L2 | S2 | C3 | | | | | | | 1 |
| 232 | 3'-0" | 7'-0" | 1 3/4" | WD1 | HM1 | 30 MIN. | H1 | L12 | S2 | C3 | | | | | | | |
| 234 | 3'-0" | 7'-0" | 1 3/4" | WD1 | HM1 | | H1 | L3 | S2 | | | | | | | | |
| 235 | 2'-8" | 7'-0" | 1 3/4" | WD1 | HM1 | | H1 | L12 | S2 | | | | | | | | |
| 236 | 2'-8" | 7'-0" | 1 3/4" | WD1 | HM1 | | H1 | L12 | S2 | | | | | | | | |
| 237 | 3'-0" | 7'-0" | 1 3/4" | WD1 | HM1 | | H1 | L3 | S2 | | | | | | | | |
| 240 | 3'-0" | 7'-0" | 1 3/4" | WD1 | HM1 | | H1 | L3 | S2 | | | | | | | | |
| 241 | 3'-0" | 7'-0" | 1 3/4" | WD1 | HM1 | | H1 | L3 | S2 | | | | | | | | |
| 242 | 3'-0" | 7'-0" | 1 3/4" | WD1 | HM1 | | H1 | L12 | S2 | | | | | | | | |
| 243 | 3'-0" | 7'-0" | 1 3/4" | WD1 | HM1 | | H1 | L12 | S2 | | | | | | | | |
| 244 | 3'-0" | 7'-0" | 1 3/4" | WD1 | HM1 | 30 MIN. | H1 | L12 | S2 | C3 | | | | | | | |
| 246 | 3'-0" | 7'-0" | 1 3/4" | WD1 | HM1 | | H1 | L9 | S2 | | | | | | | | |
| 247 | 3'-0" | 7'-0" | 1 3/4" | WD1 | HM1 | | H1 | L9 | S2 | | | | | | | | |
| 248 | 3'-0" | 7'-0" | 1 3/4" | WD1 | HM1 | | H1 | L9 | S2 | | | | | | | | |
| 249 | 3'-0" | 7'-0" | 1 3/4" | WD1 | HM1 | | H1 | L9 | S2 | | | | | | | | |
| 252 | 3'-0" | 7'-0" | 1 3/4" | WD1 | HM1 | | H1 | L12 | S2 | | | | | | | | |
| 253 | 3'-0" | 7'-0" | 1 3/4" | WD1 | HM1 | | H1 | L12 | S2 | | | | | | | | |
| 254 | 3'-0" | 7'-0" | 1 3/4" | WD1 | HM1 | | H1 | L9 | S2 | | | | | | | | |
| 255 | 3'-0" | 7'-0" | 1 3/4" | WD1 | HM1 | | H1 | L9 | S2 | | | | | | | | |
| 256A | 3'-0" | 7'-0" | 1 3/4" | MD1 | HM1 | | H1 | L3 | S2 | | | | | | | | |
| 257A | 2'-4" | 7'-0" | 1 3/4" | WD1 | HM1 | | H1 | L2 | S2 | | | | | | | | |
| 257B | 3'-0" | 7'-0" | 1 3/4" | WD1 | HM1 | | H1 | L2 | S2 | | | | | | | | |
| 270 | 3'-0" | 7'-0" | 1 3/4" | WD2 | HM1 | | H1 | L2 | S2 | | | | | | | | |

REMARKS:
1.) PROVIDE ELECTRIFIED PANIC HARDWARE WITH ELECTRONIC LATCH RETRACTION - COORDINTE WIIHT SECURITY COMPANY

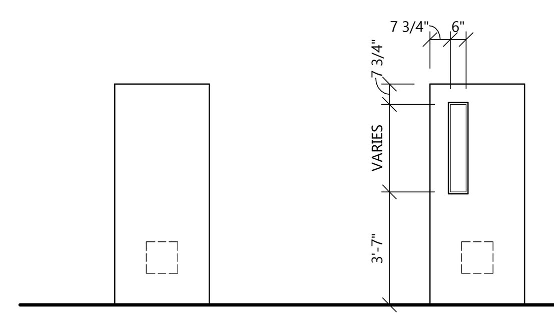


WD1
SOLID CORE WOOD DOOR

WD2
SOLID CORE WOOD DOOR
INTERIOR GLAZING: GL-2

## SOLID CORE WOOD DOOR ELEVATIONS

SCALE: 1/4" = 1'-0"

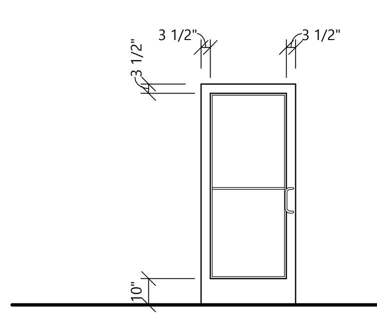


AD5
350 MEDIUM STILE ALUMINUM DOOR
INTERIOR GLAZING: GL-2
EXTERIOR GLAZING: IG-2

## ALUMINUM DOOR ELEVATIONS

SCALE: 1/4" = 1'-0"

# GENERAL DOOR AND FRAME NOTES:

- ALL DOORS SHALL MEET A.D.A. REQUIREMENTS
- ALL DOOR THRESHOLDS SHALL NOT EXCEED 1/2" IN HEIGHT
- VERIFY FRAME DEPTHS W/ WALL THICKNESS. PROVIDE WRAP AROUND FRAMES AT STUD WALLS
- PROVIDE SEALANT BOTH SIDES OF DOOR FRAMES, WHERE DIFFERENT MATERIALS MEET AND FOR WEATHER TIGHTNESS
- GENERAL CONTRACTOR TO VERIFY SIZE OF ALL EQUIPMENT (ELECTRICAL, MECHANICAL, KITCHEN, LAUNDRY, ETC.) SELECTED FOR THE PROJECT TO DETERMINE THAT ALL DOORS (INCLUDING PATH OF TRAVEL) ARE OF ADEQUATE SIZE TO ACCOMMODATE INSTALLATION AND REPLACEMENT
- VERIFY ALL ROUGH OPENING REQUIREMENTS WITH MANUFACTURERS DRAWINGS
- SEE SHEET T2.0 FOR GENERAL BUILDING SPECIFICATIONS
- DOOR, FRAME AND HARDWARE SCHEDULE TO BE PROVIDED BY HARDWARE SUPPLIER FOR A/E REVIEW - NUMBERING SYSTEM AND NOMENCLATURE SHALL MATCH THOSE FOUND IN CONSTRUCTION DOCUMENTS
- HARDWARE SUPPLIER IS RESPONSIBLE FOR COORDINATING KEYING REQUIREMENTS WITH OWNER
- ALUMINUM SUPPLIER SHALL FURNISH AND INSTALL ALL HARDWARE FOR ALUMINUM DOORS AS NOTED ON PLANS - THE SAME MANUFACTURERS AND MODELS SHALL BE USED FOR BOTH ALUMINUM AND OTHER DOOR HARDWARE
- CONTRACTOR TO PROVIDE PRODUCTS AND SYSTEMS COMPLETE WITH ALL ACCESSORIES, TRIM, FINISH, FASTENERS AND OTHER ITEMS NEEDED FOR A COMPLETE INSTALLATION AND INTENDED USE AND EFFECT
- DOOR UNDERCUTS, WHERE NOTED, SHALL BE 1" FROM FINISHED FLOOR (TYP.)
- DOOR TRANSFER GRILLES BY DOOR SUPPLIER
  SIGHT PROOF, V-SLAT WOOD LOUVER
  -STAIN AND VARNISH TO MATCH DOOR
- SEE ELECTRICAL PLANS FOR DOOR CARD READER LOCATIONS
- SEE FLOOR PLANS & STRUCTURAL FOUNDATION PLANS FOR GUARD POST AND GOAL POST LOCATIONS
- FERROUS METAL (PAINTED) - DOORS, FRAMES, HANDRAILS & MISC. METALS:
  (1) COAT SW KEM KROMIC UNIVERSAL METAL PRIMER, B50WZ SERIES
  (2) COATS PRO MAR 200 ALKYD ENAMEL EG-SHEL OR SEMI GLOSS B33 OR B34 SERIES

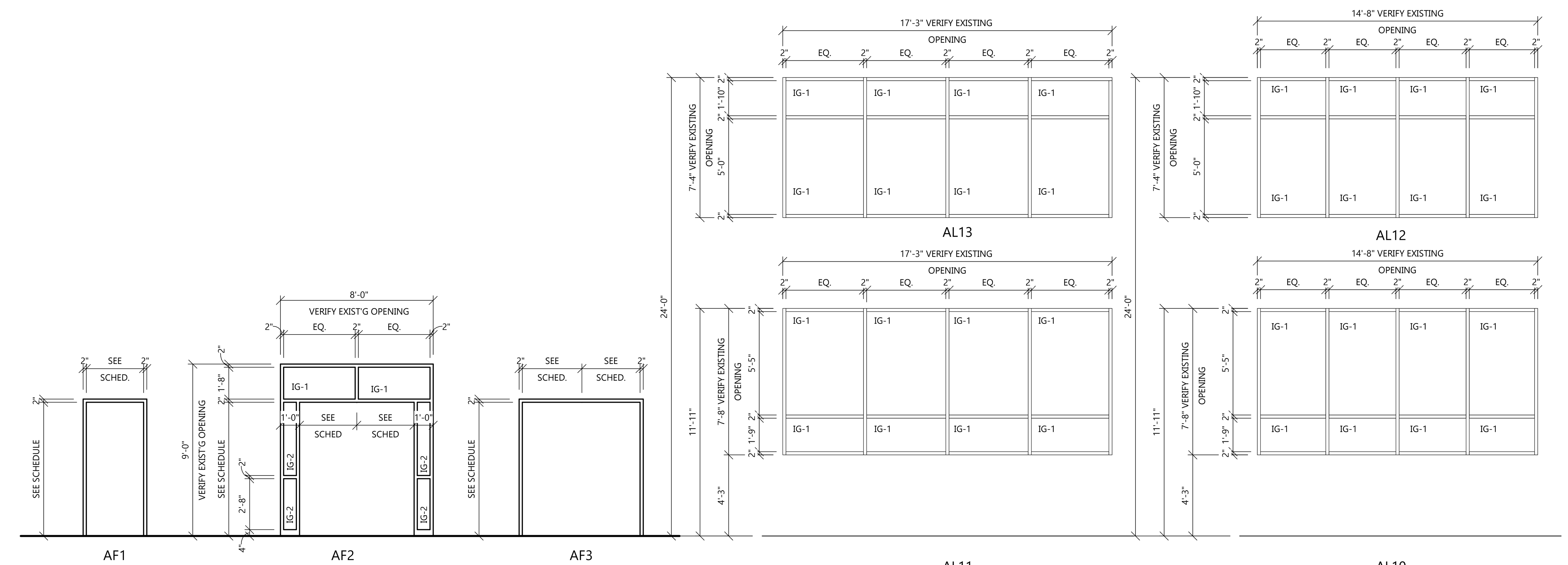


## ALUMINUM FRAME ELEVATIONS

SCALE: 1/4" = 1'-0"

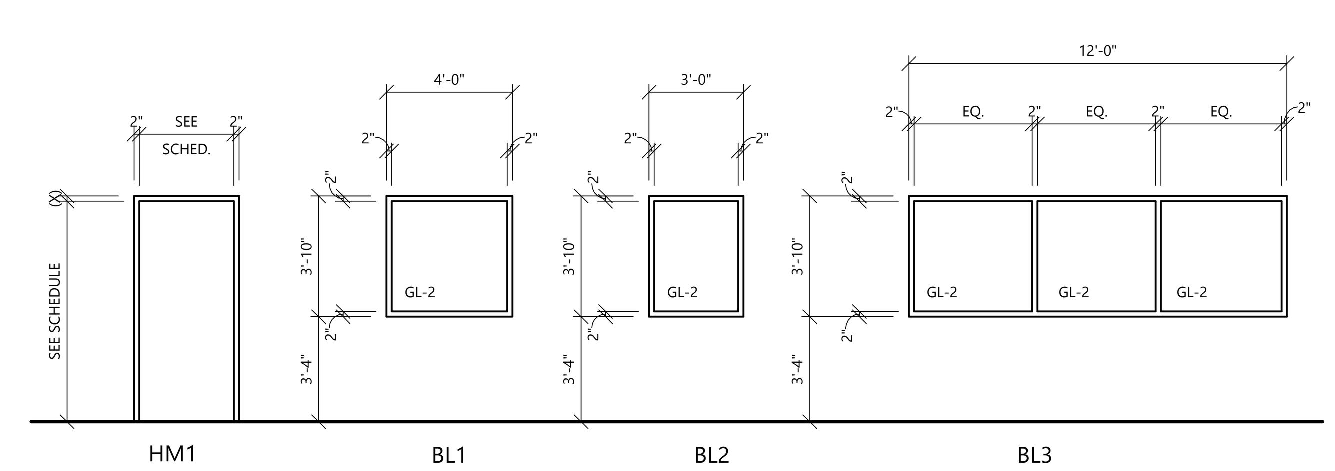


## HOLLOW METAL FRAME ELEVATIONS

SCALE: 1/4" = 1'-0"

## ARCHITECTURAL DOOR SCHEDULE


EXCEL
ARCHITECTS • ENGINEERS • SURVEYORS
Always a Better Plan
100 Camelot Drive
Fond Du Lac, WI 54935
Phone: (920) 926-9800
www.EXCELENGINEER.com


COLLABORATION

WDS CONSTRUCTION

PROJECT INFORMATION

PROPOSED ALTERATION FOR:
**PAVE**
111 EAST BURNETT STREET • BEAVER DAM, WI

PROFESSIONAL SEAL

PRELIMINARY DATES
APR. 1, 2020

**NOT FOR CONSTRUCTION**

JOB NUMBER
2004640

SHEET NUMBER
**A6.1**


2019 © EXCEL ENGINEERING, INC.


C:\Users\deans\Documents\2004640_Arch_Central_(R19)_deans.rvt
4/1/2020 3:53:48 PM